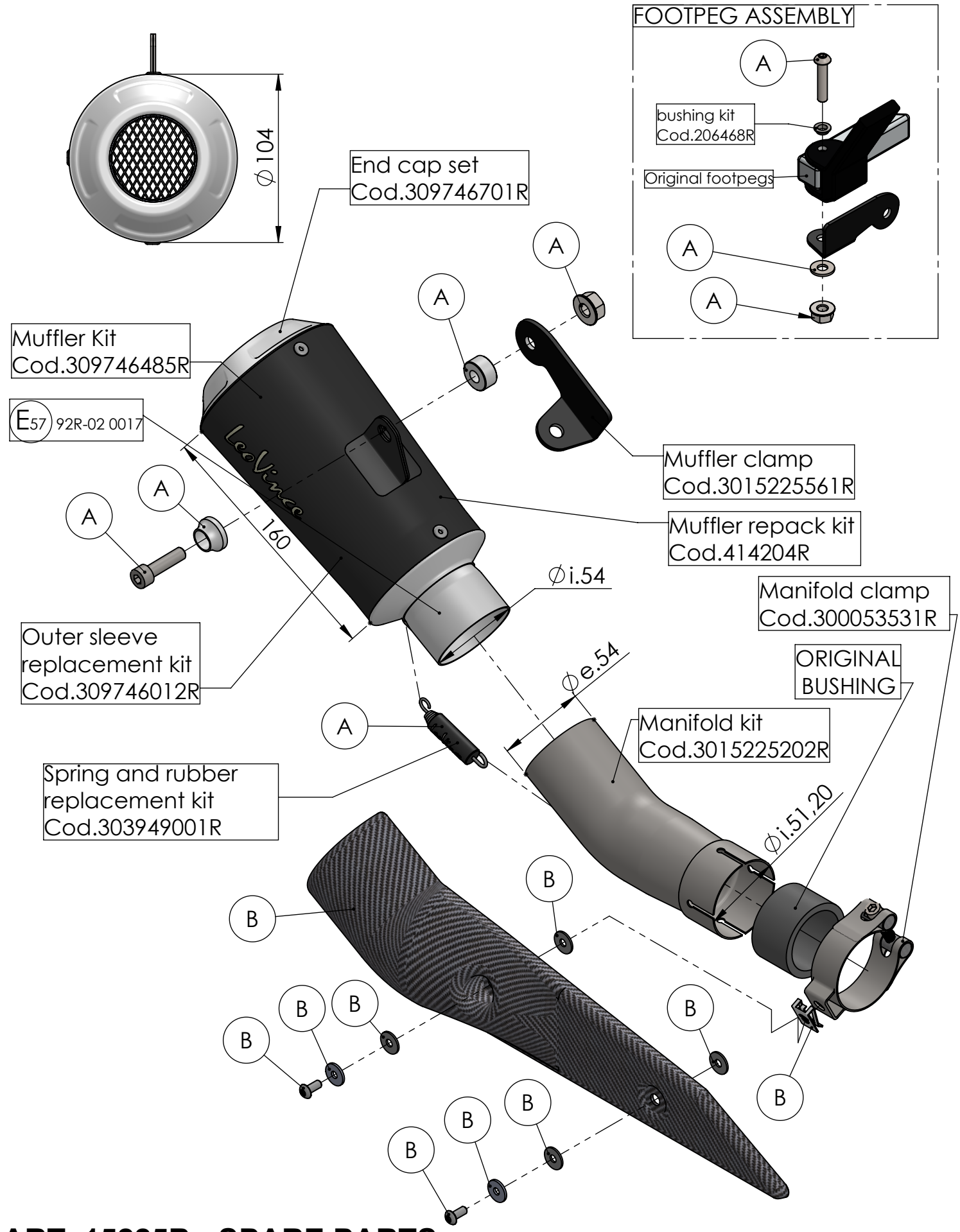

ART. 15225B - SPARE PARTS

SUZUKI GSX-S 1000 / GSX-S 1000 F

(A) FITTING KIT Cod.3015225601R (B) FITTING KIT Cod.3014271001R